TEAR SHEET

Langham Large Picture Light
Item # RL 2788NB

Designer: Ralph Lauren

Height: 2.5"
Width: 36"
Extension: 5.25" - 6.75"
Backplate: 24" x 2.5" Rectangle
Finishes: BZ, NB, PN
Lightsource: Dedicated LED
Wattage: 27w (2700lm)
Weight: 7 Pounds
Note: Requires Smaller Outlet Box

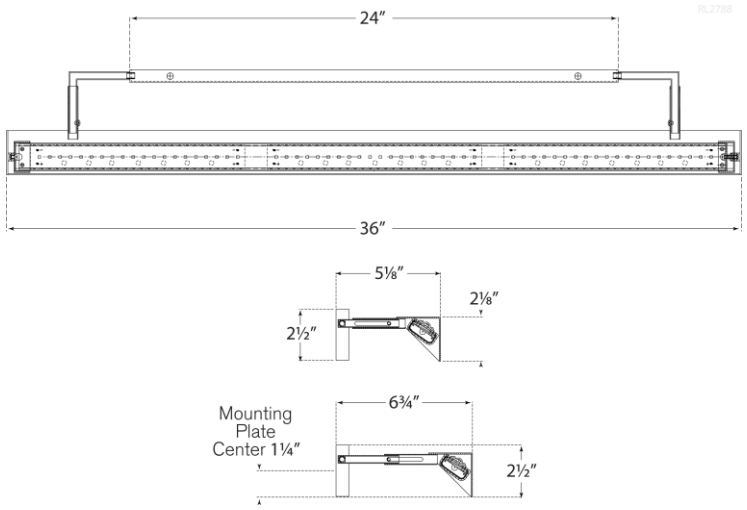

VISUAL COMFORT & CO.